Your Solutions Partner

OWNER'S MANUAL

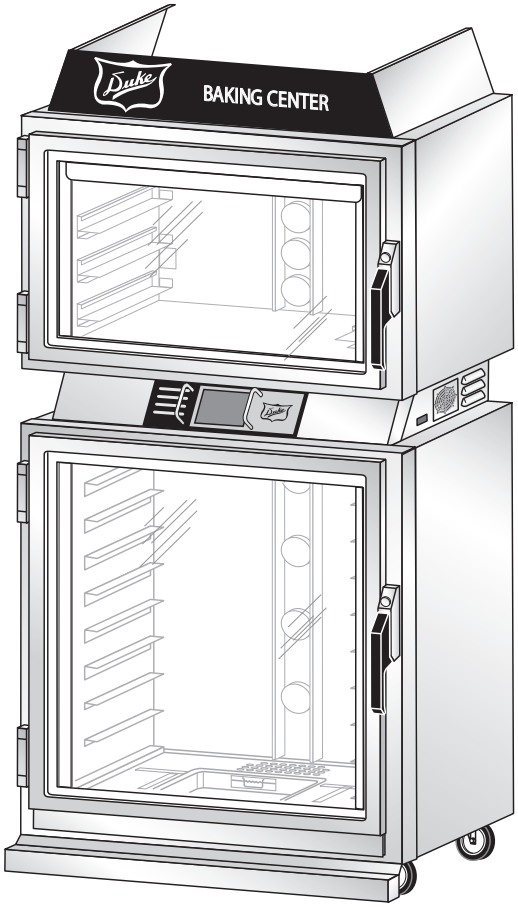

PROOFER OVEN WITH TOUCH SCREEN CONTROLS (TSC)

Models:
TSC-6/18 TSC-3/9

IMPORTANT INFORMATION, READ BEFORE USE.
PLEASE SAVE THESE INSTRUCTIONS.

Duke Manufacturing Company

2305 N. Broadway
St. Louis, MO 63102
Phone: 314-231-1130
Toll Free: 1-800-735-3853
Fax: 314-231-5074
www.dukemfg.com

P/N 512792H

TABLE OF CONTENTS

INTRODUCTION

The Duke TSC (Touch Screen Control) Proofer Oven was developed in response to the Customer's need for uniform baking capabilities and to provide consistently high, quality just-baked bread.

The Duke Proofer Oven utilizes Duke's **unique directional convection airflow technology** that provides even heat distribution and a uniform bake without the need for turning pans during the bake cycle. This enhances the quality and consistency of the baked products, reduces food scrap and waste while simplifying operating process.

The low profile oven won't block the view of menu boards and will easily roll through a standard height door. The oven and proofer doors are field reversible with a drip channel on the proofer door, which prevents water from dripping on the floor.

Full-width doors on the oven and proofer help to display and merchandise fresh baked bread to the customer.

The full-width oven and proofer cavity will accept standard half-size or full-size sheet pans.

The TSC models feature a simple color LCD touch screen control that allows users to quickly select from pre-programmed recipes for baking and proofing. A single button press starts the selected recipe. Advanced features are also included for custom recipes plus user accessible information for operating instructions and maintenance information.

IMPORTANT SAFETY INSTRUCTIONS

Throughout this manual, you will find the following safety words and symbols that signify important safety issues with regards to operating or maintaining the equipment.

WARNING	**Indicates information important to the proper operation of the equipment. Failure to observe may result in damage to the equipment and/or severe bodily injury or death.**
ELECTRICAL WARNING	**Indicates information relating to possible electrical shock hazard. Failure to observe may result in damage to the equipment and/or severe bodily injury or death.**
CAUTION	**Indicates information important to the proper operation of the equipment. Failure to observe may result in damage to the equipment.**
HOT SURFACE	**Indicates hot surface for equipment and parts. Failure to observe caution could result in personal injury.**
ESD WARNING:	**Indicates susceptibility to static discharge. Failure to observe ESD precautions may result in equipment damage.**

In addition to the warnings and cautions in this manual, use the following guidelines for safe operation of the unit.

- Read all instructions before using equipment.
- Do not attempt to defeat the grounded connector.
- Install or locate the equipment only for its intended use as described in this manual.
- Do not use corrosive chemicals, water jet equipment, or other pressurized liquid spraying equipment to clean this unit.
- This equipment should be serviced by qualified personnel only. Contact the nearest Duke authorized service facility for adjustment or repair.
- Do not block any openings on the unit.
- A minimum clearance of 6″ (152.4 mm) from the top of the unit to the ceiling must be provided.
- Unit may start operation with inadvertent contact with touch screen display or from other extraneous sources. Turn off all poles mains disconnects should abnormal or unwanted operation occur.
- Install the Restraining Device Kit to prevent damage to main supply connections.
- This unit is not to be operated by children, unskilled or untrained persons, or persons with insufficient mental or physical capabilities. Unsupervised children are prohibited from playing near or contacting

IMPORTANT SAFETY INSTRUCTIONS (continued)

the unit.

- Turn off external mains supply disconnect and allow unit to cool down before servicing or performing maintenance.
- The procedures in this manual may include the use of chemical products. You must read the Material Safety Data Sheets before using any of these products.
- Properly rated all poles mains protection and earthing compliance with local electric codes are required for safe operation of this unit.
- Water supply connections to the unit must comply with local plumbing code and/or standards.
- Disposal of the unit must be in accordance with local environmental codes and/or any other applicable codes.
- **Hg** Lamp(s) inside the LCD display in this product contain mercury and must be recycled or disposed of according to local, state or federal laws.
- **SAVE THESE INSTRUCTIONS**

SPECIFICATIONS

Patent Pending
Model TSC

Unit Weight:	580 lbs / 263 kg
Shipping Weight: Carton Box	630 lbs / 286 kg
Shipping Weight: Wooden Crate	720 lbs / 327 kg

Line Ratings - TSC Proofer Oven with Touch Screen Control

Line Supply Voltage (V)	Line Supply Frequency (Hz)	Line Phase Configuration	Total Maximum Line Power Watts (W)	Total Maximum Line Current Amps (A)
208	60	Single Phase	6 650	32
208	60	3 ~	6 650	32 ▲1
240	50 & 60	Single Phase	7 200	30
240	60	3 ~	7 200	30 ▲1
380-415	50	3N ~	7 200	30 ▲2

▲1 *L1<15A, L2<15A, L3<25A* ▲2: *L1<15A, L2<15A, L3<15A, N = Comm*

SPECIFICATIONS (continued)

Compliance Declaration - TSC Proofer Oven with Touch Screen Control		
LISTED COMMERCIAL COOKING APPLIANCE 509L	Standard: UL197	File: KNGT.E17421
INDEXER COMMERCIAL APPARIEL DE QUISINE	Standard: CSA-C22.2 No. 109	File: KNGT7.E17421
CLASSIFIED EPH	Standard: ANSI / NSF 4	File: TSQT.E157479
CE	Directive 2006/95/EC: EN60335 -1:2002, A1, A2, A11, A12 EN 60335-2-42:2003	Directive 89/336/EEC: EN61000-6-1 EN61000-6-3
	WEEE Directive 2002/96/EC RoHS 2002/95/EC	

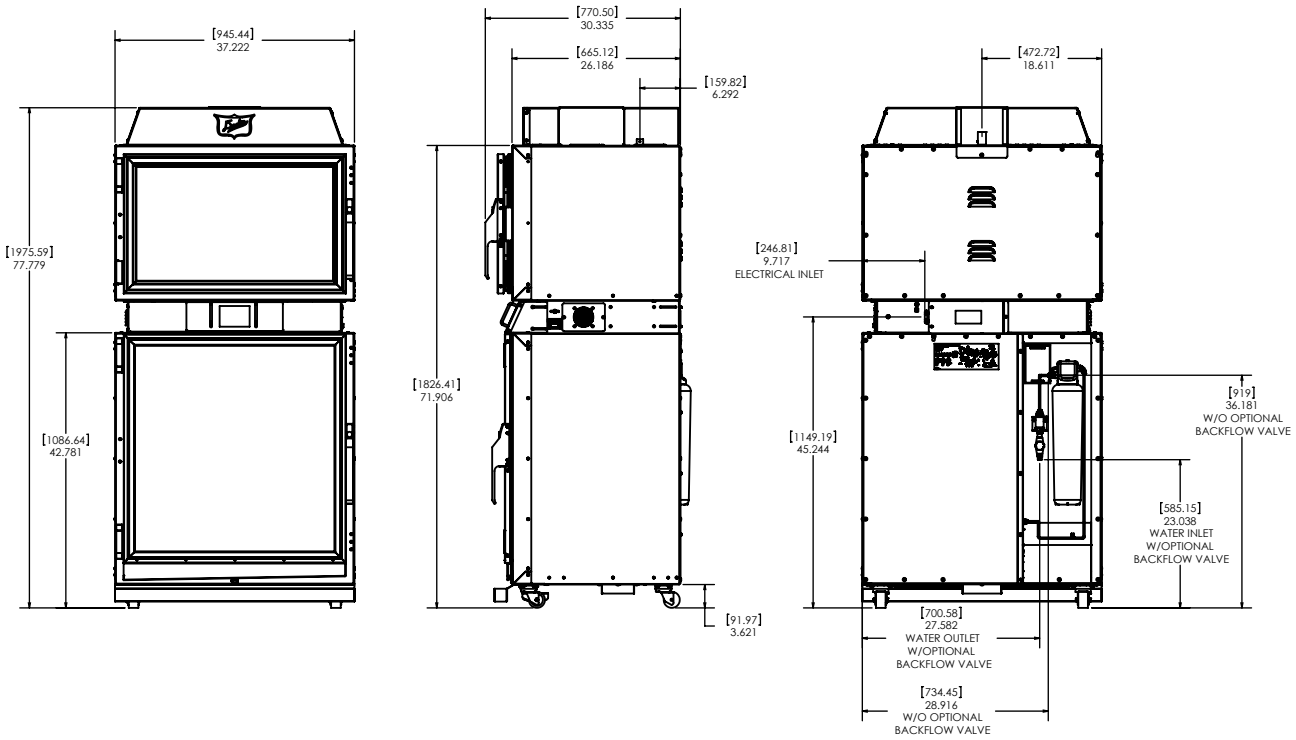

MAIN FEATURES

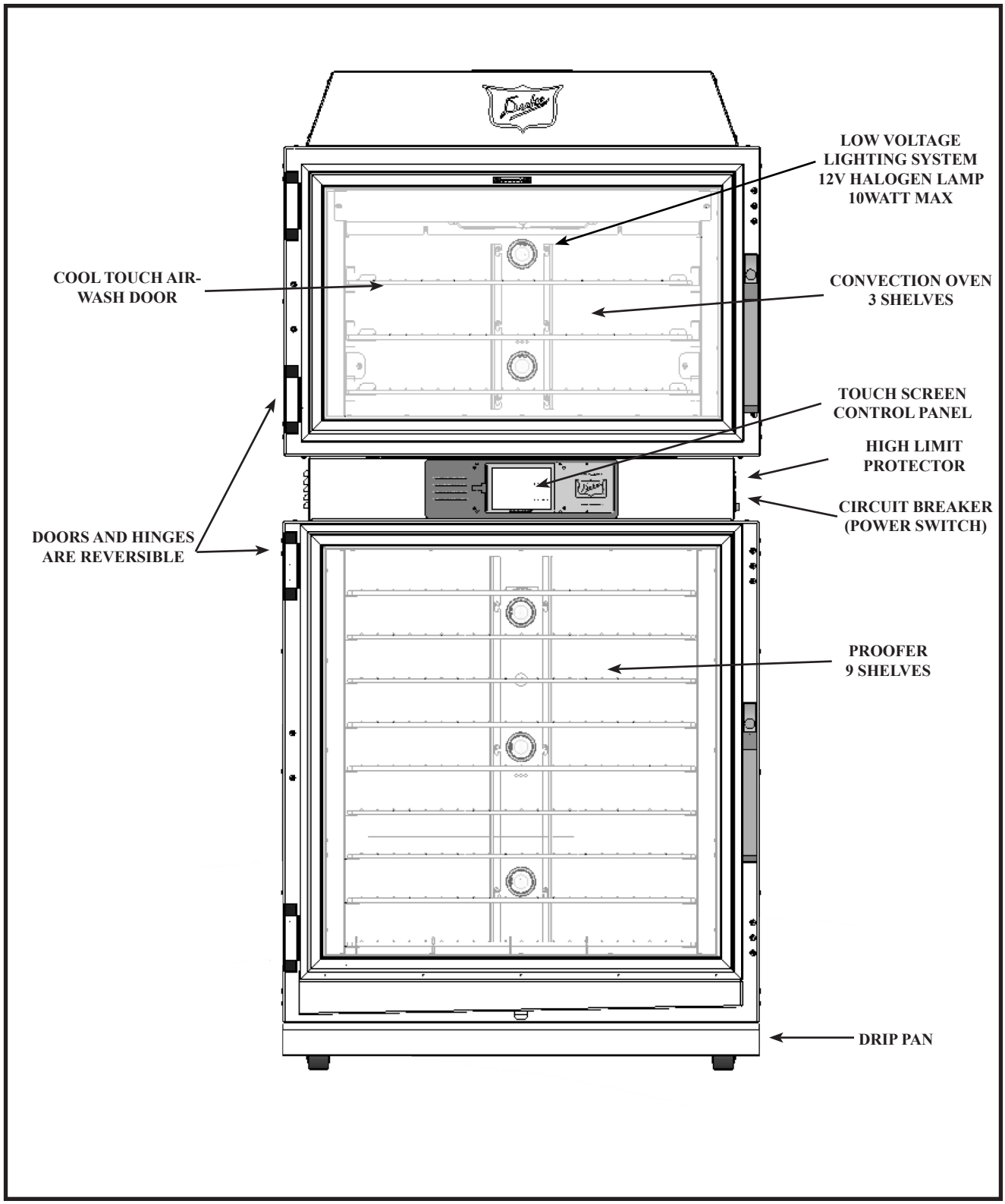

Figure 1: Main Features

INSTALLATION

UNPACKING UNIT

Inspect the shipping carton and/or container, carefully noting any exterior damage on the delivery receipt; also note any damage not evident on the outside of the shipping container (concealed damage). Contact the carrier immediately and file a damage claim with them. Save all packing materials when filing a claim. Freight damage claims are the responsibility of the purchaser and are not covered by the warranty.

- Follow the instructions on the Carton Box for unpacking the unit.
- Inspect unit for damage such as, broken glass, etc.
- Report any dents or breakage to source of purchase immediately.
- **Do not attempt to use unit if damaged.**
- Remove all materials from unit interior.
- If unit has been stored in extremely cold area, wait a few hours before connecting power.

UNIT PLACEMENT

- Do not install unit next to source of heat, such as deep fryer, etc.
- Install unit on level surface floor.
- Minimum Clearance of 6" (152mm) must be maintained between the unit and any combustible substance.
- Either side of the unit must remain open for proper airflow for electrical component cooling. The rear of the unit and one side may be installed without clearance.

WARNING

ELECTRICAL SHOCK HAZARD
UNIT MUST BE SAFETY GROUNDED, EARTHED.

DO NOT MODIFY OR DEFEAT ELECTRICAL CONNECTIONS

ELECTRICAL CONNECTIONS: Connection of the unit to the mains supply **MUST** be performed by an authorized person in accordance with codes, standards, and laws governing the installation site using properly rated all poles mains protection, all poles mains disconnects, safety ground earthing, and shall be a minimum of 48" (1.2 meter) long to allow the equipment to be moved for cleaning.

Mains Supply Connection: USA and non-EU Countries must use flexible conduit within variances that may be required by local electric codes or regulations.

European Union (CE) installations must use HO7RN-F, 5G 2,5mm flexible cordage.

The Mains Supply safety / earth ground wire must be longer than mains conductors at the unit's interconnections to prevent stress under pull.

Contact Duke for service of IVS (Integrated Ventilation System) HO5RN supply interconnection.

EXTERNAL EQUIPOTENTIAL

Terminal provides a connection for bonding to equipment enclosure.

WATER SUPPLY CONNECTION

This equipment must be installed in accordance with all applicable federal, state, and/or local plumbing codes having jurisdiction.

The water inlet utilizes ¼” (6.35mm), OD plastic tubing. Install the tubing in a manner to ensure there are no kinks, strains, or tight bends. Leave sufficient length to allow unit movement for service and cleaning.

The tubing should be cut square and be free of any deformations at the connection points. All burrs and sharp edges should be removed for proper connection.

Insert the tubing through the compression fitting with the threads pointing towards the end of the tubing.

Push the tubing into the fitting as far as it will go and tighten the nut with a ½” (12.7mm), wrench. Do not over-tighten the nut. If leaks occur, further tighten the fitting until the leakage stops.

INSTALLATION

1. This unit can be converted to other mains supply configurations by Duke Manufacturing approved service personnel. Call Duke Service Department for action if electrical rating tag information is not compatible with the available mains supply.
2. This unit is supplied with the national & international specified water supply interconnection. Backflow prevention protection is optionally supplied as a factory installed option or as an add-on kit. Local regulation variances or additional requirements must be evaluated prior to installation. New water supply line interconnection must be used when installing this unit. Maximum / minimum supply pressure specification is 65PSI (450KPa) / 40PSI (275KPa) for all system plumbing components. See **INSTALLATION OF WATER FILTER** section prior to water supply interconnect.

WARNING: RISK OF INJURY

3. This appliance must be secured to building structure. A restraining device kit (#153586) provided with the unit limits the movement of the appliance without transmitting stress to the mains supply. Installation instructions are in the kit. Figure 2.

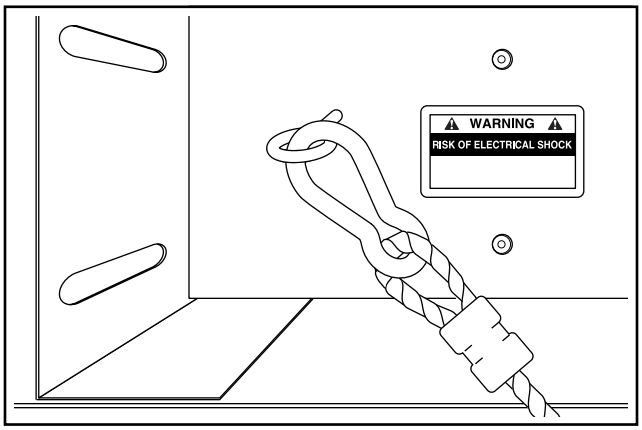

Figure 2: **Restraining Device Kit (Part # 153586)**

WARNING: HAZARDOUS VOLTAGE
RISK OF ELECTRIC SHOCK

THIS RESTRAINING DEVICE MUST ALWAYS BE CONNECTED WHEN THE APPLIANCE IS IN SERVICE. DISCONNECT ONLY FOR SERVICING AND/OR CLEANING, THEN RECONNECT WHEN THE APPLIANCE HAS BEEN RETURNED TO ITS NORMAL POSITION.

4. IMPORTANT: A minimum clearance of 6" (152mm) from the top of unit to the ceiling must be provided. Unit may be installed with minimal clearance on one side and rear of the cabinet.
5. Check the swing of the door. The hinge side can be changed by referring to the **Reversing Oven Door Swing Direction section of this manual.**
6. Check the door seal and make sure both doors close completely. If they do not close and seal properly, refer to the **Door Gasket Adjustment section of this manual.**
7. Place the wire racks in the oven and proofer.
8. Unit can be mechanically attached to wall using optional wall-mounting brackets. Optional wall-mounting brackets are not required for safe operation of the unit. Refer to **Installation of Wall Brackets section of this manual** for the instructions on Installation of Wall Brackets to the wall.

Technical Description and Application Notes for TSC Proofer Oven Backflow Preventer System

Check with your local authority having jurisdiction regarding approvals for connecting the Duke TSC Proofer Oven to a potable water supply before making any plumbing connections. Plumbing code requirements vary, but European Union (CE) and other jurisdictions require a backflow prevention device that is factory-installed or available as a kit (P/N 600187). The backflow prevention device used on Duke TSC Proofer Ovens protects water supply systems by preventing the reverse flow of non-potable water into the potable domestic water system. The device consists of two independently

acting check valves, internally force-loaded to a normally closed position and designed/ constructed to operate under intermittent or continuous pressure conditions.

The two main components of the Duke backflow preventer system are:

- Dual Check Valve type backflow preventer that conforms to ANSI/ASSE standard #1024 and is CSA standard B64.6 certified.
- Inlet water strainer equipped with 100-mesh screen and installed up stream of the backflow preventer. The screen is conveniently located on the rear panel of the proofer, below the backflow preventer, for easy access during cleaning/replacement.

Duke Manufacturing Co.

This equipment is intended to be connected to a potable water supply system under pressure and is to be installed with adequate backflow protection to comply with all applicable federal, state, and local codes.

Water supply pressure for proper operation shall be:
Minimum 40 PSIG(275 KPa)
Maximum 65 PSIG(448 KPa)
measured at water line inlet to the equipment.

If so equipped, regular maintenance is required to replace the water filter cartridge at least once per year, and to clean the inlet water screen at least once per year. Consult state/local codes for any additional requirements.

INSTALLATION OF WATER FILTER

Install new filter by removing sanitary cap from top of cartridge, insure two black O-rings are in place, then lift up into filter head and rotate cartridge 1/4 turn counter clockwise until it comes to a complete stop. Flush 2 gallons (5.6 Liters) of water through the new filter before using proofer to purge air from filter. Remove hose from bottom of proofer by loosening the compression nut at the disconnect fitting and pull hose out. Place hose over container and turn on water. It will take a minute for the filter to fill before water flows out of hose into container. once filter is flushed with 2 gallons (5.6 Liters) of water, turn off water supply again, insert hose into water line disconnect, tighten compression nut and turn water supply on again. Check for leaks at connection fittings.

Patent(s) Pending

INSTALLATION OF WATER FILTER

1. Install new filter by removing sanitary cap from top of cartridge, insure two black O rings are in place, then lift up into filter head and rotate cartridge 1/4 turn counter clockwise until it comes to a complete stop.

- Flush 2 gallons (5.6 Liters), of water through the new filter before using proofer to purge air from filter. Remove hose from bottom of proofer by loosening the compression nut at the disconnect fitting and pull hose out. Place hose over container and turn on water. It will take a minute for the filter to fill before water flows out of hose into container.
- Once filter is flushed with 2 (5.6 Liters), gallons of water, turn off water supply again, insert hose into water line disconnect, tighten compression nut and turn water supply on again. Check for leaks at connection fittings.

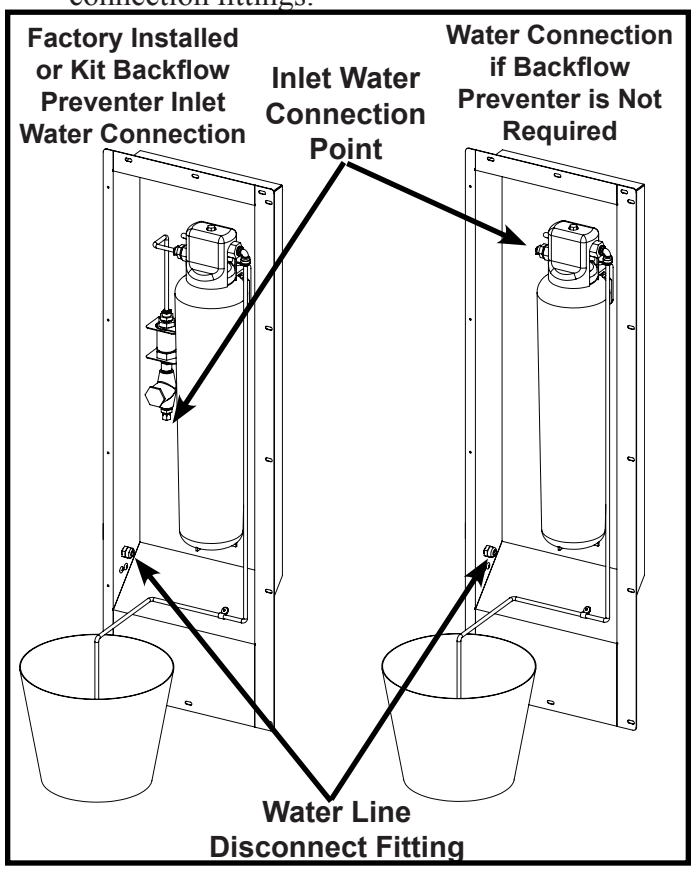

Figure 3: Water Filter (Flushing 2 gallons (5.6 Liters), of water)

INSTALLATION OF WALL-BRACKETS

NOTE: Verify interconnections and function prior to installing optional wall brackets

1. Mount the Wall Mounting Brackets with screws provided with the Proofer Oven.
2. Extend the Wall Mounting Bracket towards the wall by sliding it through the slot provided but do not tighten the screws.
3. Mark the Wall & Drill holes for the wall anchors.
4. Insert the wall anchors into the holes.
5. Position the Wall Mounting Brackets against the wall.
6. Insert the screws into the Wall Mounting Bracket.
7. Ensure that the Brackets are firmly against the wall and tighten the screws securely.

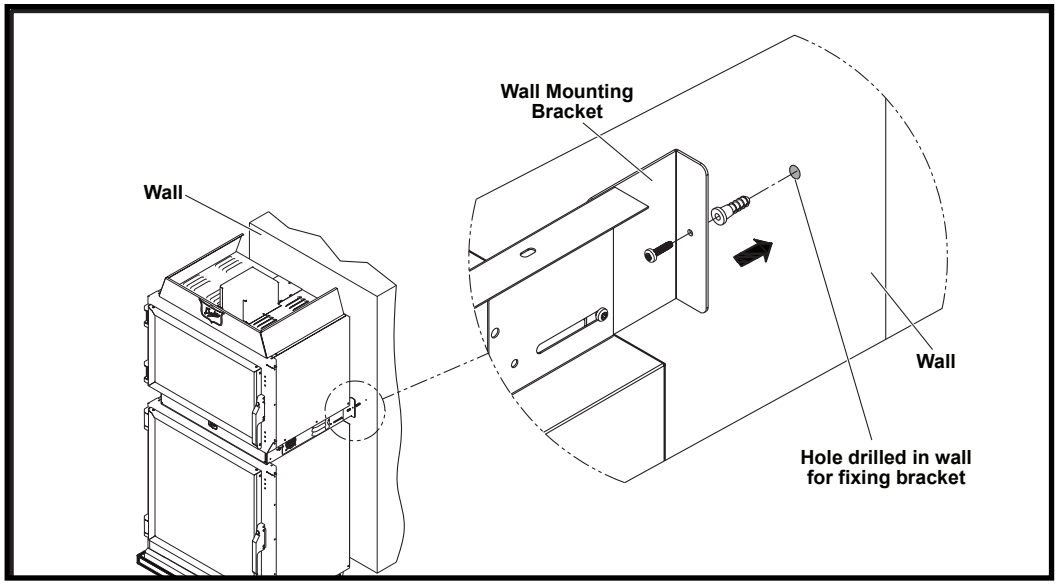

Figure 4: Wall Mounting Bracket

AUDIBLE ALARMS

The Oven/Proofer has various audible alarms.

1 chirp	Keystroke acknowledgement
3 short chirps	Oven and Proofer up-to-temperature notification
4 beeps (Continuous until cleared)	Oven door open alarm
3 long chirps	Proofer stagger load alarm
3 beeps (Continuous until cleared)	Proofer end of cycle
2 beeps (Continuous until cleared)	Oven end of cycle

OVEN/PROOFER START-UP

1. Have a qualified service technician or electrician connect the oven to the power supply.

2. Turn power on to the unit by using the circuit breaker on the right side of the unit.

3. Verify that the touch screen illuminates upon power up. Press touch screen to activate, then press oven button & proofer button to turn on and verify interior lights illuminate.

4. Verify Humidification of the proofer. Humidification will begin automatically. Humidity level will be controlled according to user-selected %RH set point.

5. Check the door seals and make sure both doors close completely.

6. If the unit does not power up correctly or if the doors do not close and seal properly, call Duke for assistance.

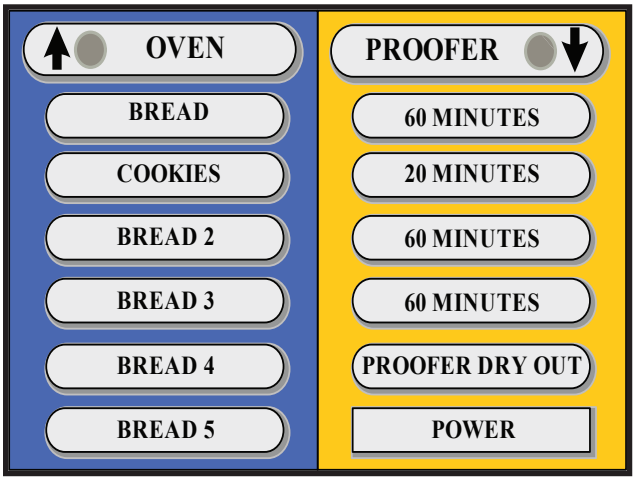

Figure 5: Main Screen

1. Turn the oven and proofer ON by touching the **OVEN** and **PROOFER** buttons located at the top of the touch screen.

2. Check to make sure that the oven and Proofer fans are running.

3. Open the oven door; the oven fan should stop.

4. Close the door; the fan should resume.

5. Allow the oven and proofer to pre-heat for at least 30 minutes. An audible alarm will sound (3 short chirps) when the oven and/or proofer reach the ready state. Your Duke Proofer Oven is now ready to operate.

If there are any problems, call the service department at Duke for assistance before calling a service agency.

CHANGE TEMPERATURE UNITS (F ˚ to C ˚)

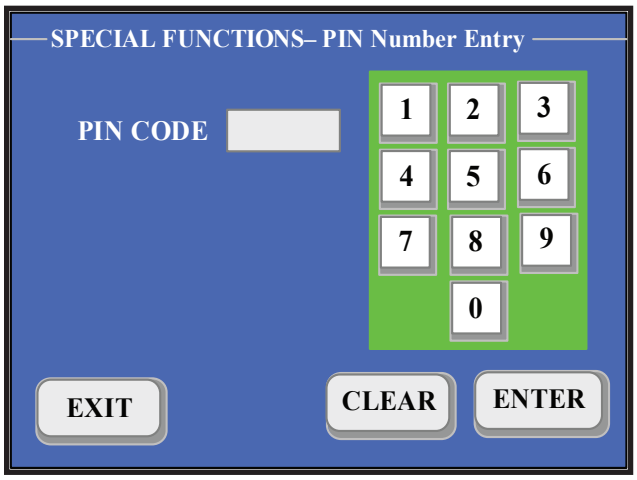

Figure 6: Special Functions Screen

1. Press and hold the **OVEN** button for Approx 5 seconds or until the Special Functions Screen opens.
2. Press **CLEAR**, **2 5 8 0** and **ENTER**.
3. Press **OK. CENTIGRADE MODE is now enabled.**

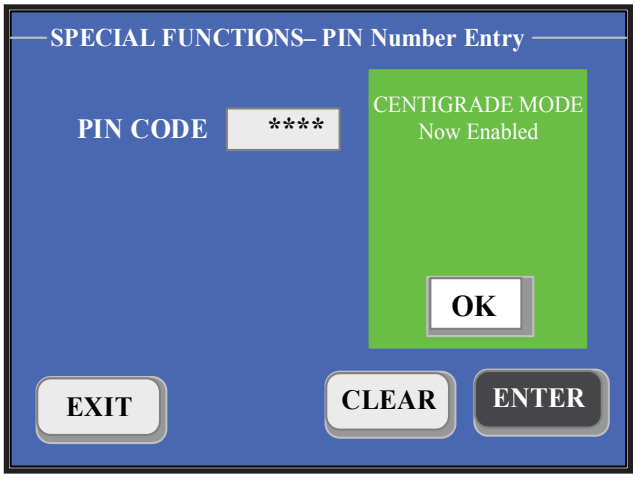

Figure 7: Centigrade Mode Enable Screen

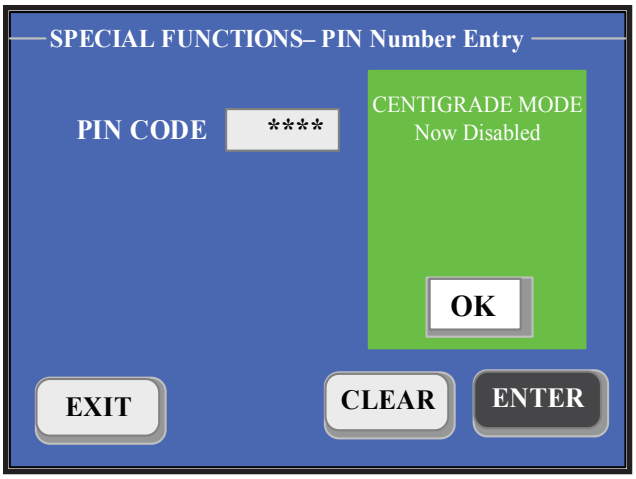

Figure 8: Centigrade Mode Disable Screen

1. Press and hold the **OVEN** button for Approx 5 seconds or until the Special Functions Screen opens.
2. Press **CLEAR**, **2 5 8 0** and **ENTER**.
3. Press **OK. CENTIGRADE MODE** is now disabled. This returns the unit to Fahrenheit mode.

PROGRAMMING CONTROLS

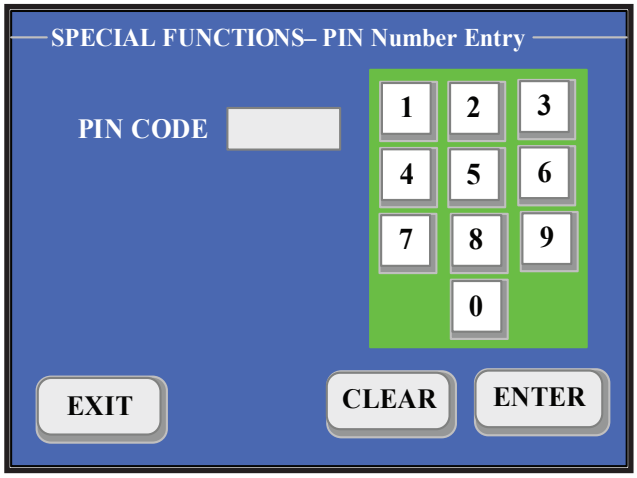

Figure 9: Special Functions Screen

1. Press and hold the **OVEN** button for Approx 5 seconds or until the Special Functions Screen opens.
2. Press **CLEAR**, **2 0 4 6** and **ENTER**.

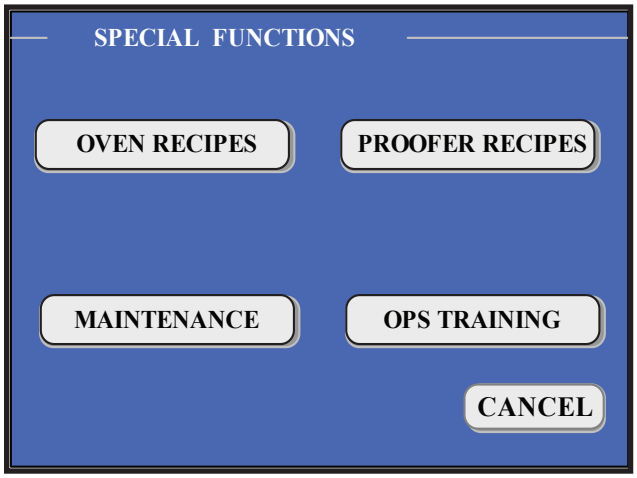

Figure 10: Special Functions Screen

OVEN PROGRAMMING INSTRUCTIONS

1. Select **OVEN RECIPES**.
2. Press the button for the profile you want to edit.

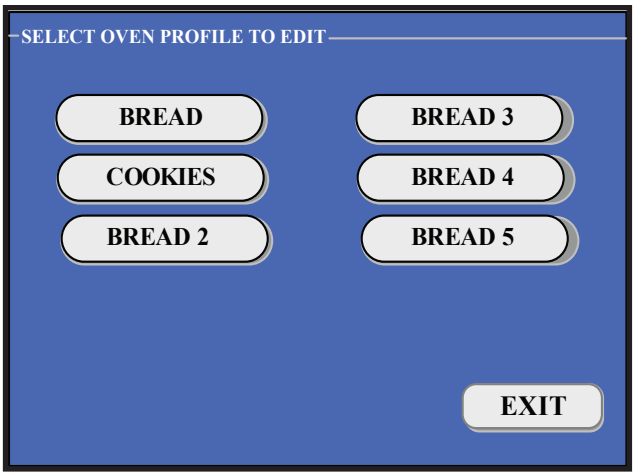

Figure 11: Oven Profile Recipe Screen

3. Press the value (Time, Temperature, etc.) you want to change.
4. When it is highlighted, change the value by pressing the desired value on number key pad.

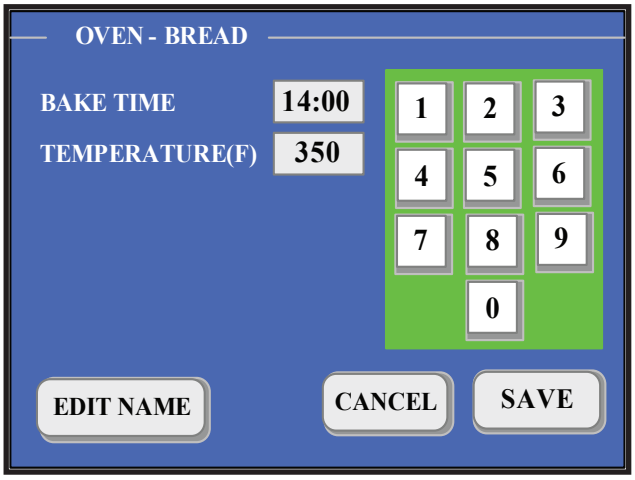

FIGURE 12: Oven Recipe Edit Screen

5. Press **EDIT NAME** to edit profile's name.

NOTE: IF NAME EDIT IS DESIRED, PERFORM THIS FUNCTION FIRST

6. Using the keypad, type a new Profile Name.
7. Press **SAVE** to return to Profile Edit Screen.
8. Press **EXIT** to return to Main Screen.

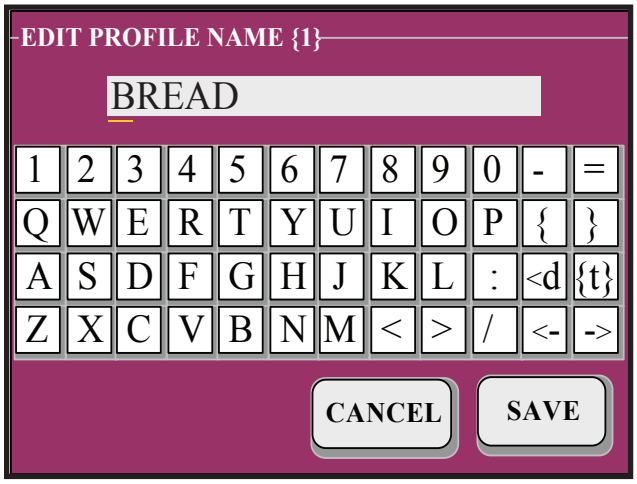

Figure 13: Profile Naming Screen

NOTE:

- **PRESSING {t} KEY TOGGLES THE KEYBOARD TO THE LOWER CASE CHARACTER SET.**
- **PRESSING <d KEY DELETES THE CHARACTER THAT IS UNDERLINED WITH THE CURSOR BAR.**
- **PRESSING –> KEY MOVES THE CURSOR TO THE RIGHT TO ENTER A SPACE OR TO CHANGE A CHARACTER.**
- **PRESSING <– KEY MOVES THE CURSOR TO THE LEFT TO CHANGE A CHARACTER**

PROOFER PROGRAMMING INSTRUCTIONS

1. Select **PROOFER RECIPES**.
2. Press the button for the profile you want to edit.

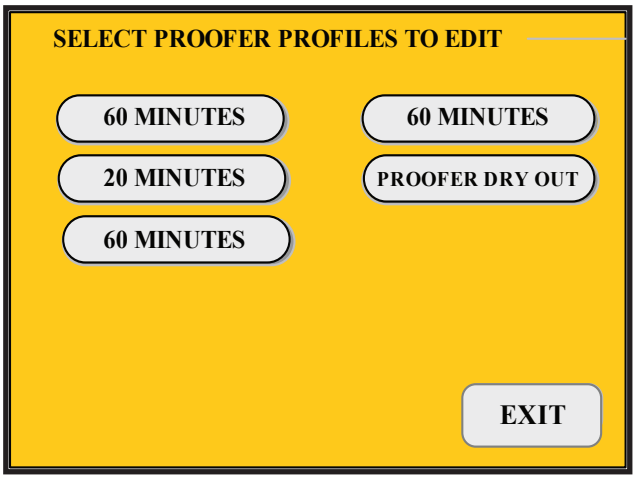

Figure 14: Proofer Profile Recipe Screen

3. Press the value (Time, Temperature, etc.) you want to change.
4. When it is highlighted, change the value by pressing the desired value on number key pad.

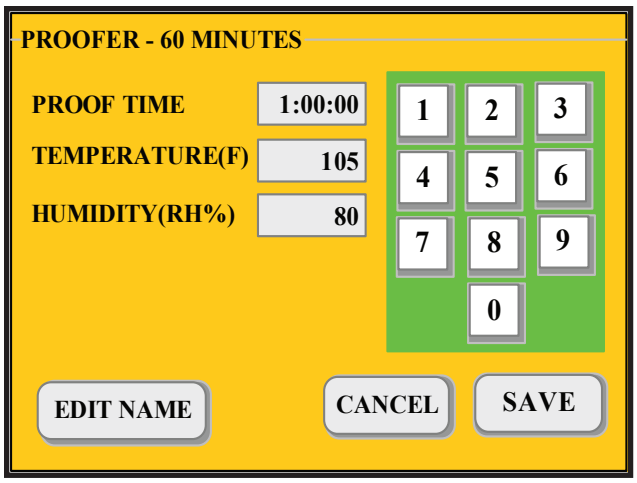

FIGURE 15: Proofer Recipe Edit Screen

5. Press **EDIT NAME** to edit profile's name.

   NOTE: IF NAME EDIT IS DESIRED, PERFORM THIS FUNCTION FIRST

6. Using the keypad, type a new Profile Name.
7. Press **SAVE** to return to Profile Edit Screen.
8. Press **EXIT** to return to Main Screen.

Application Notes for TSC Proofer Oven USB Upload Feature

Duke Mfg. has created an alternate method for configuring custom recipe settings through use of commonly-available USB memory drives, an entire set of recipe configurations can be quickly loaded for model TSC Proofer Ovens.

USB RECIPE UPLOAD

1. Turn the main power switch off then back on. Unit will beep three times and display the start screen.

Figure 16: Start Screen

2. Remove USB dust cap. (Located on left side of oven electrical compartment)

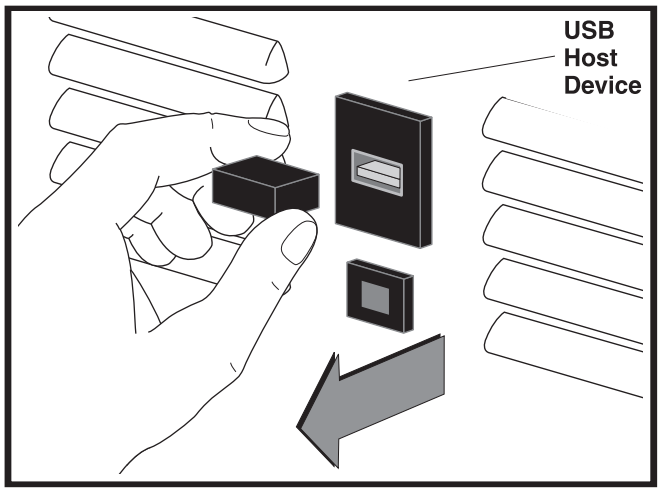

Figure 17: USB Dust Cap Removal

3. Insert USB drive with the recipe file, until seated, into the USB Host Device (filename. rcp). The green LED will flash indicating loading process.

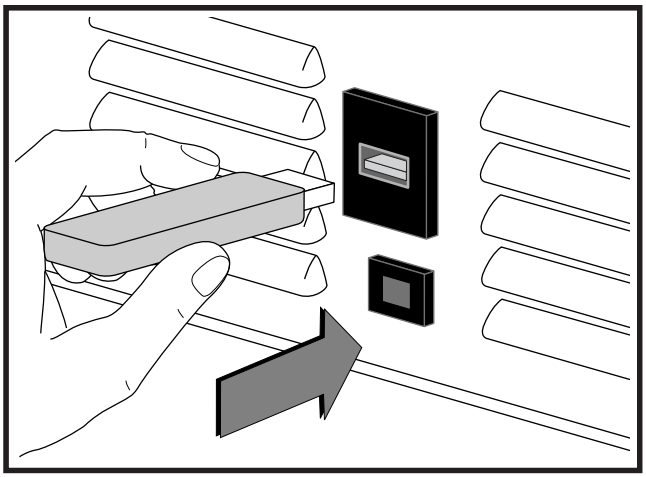

Figure 18: Inserting USB Drive Into USB Host Device

4. The Unit will Beep once and new recipes will load. The screen will display the new selections. (See example below)

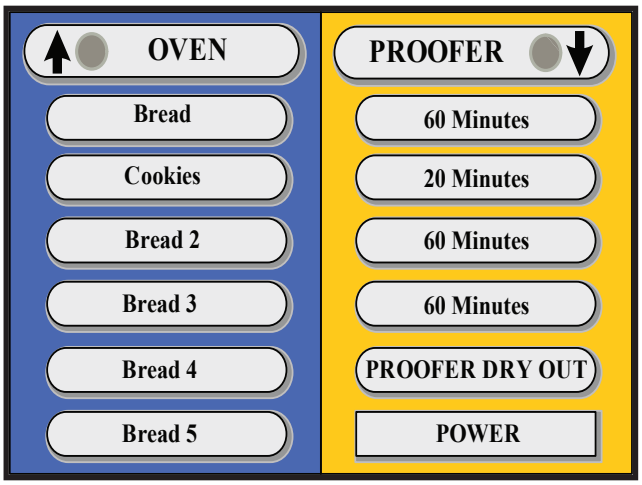

Figure 19: USB Uploaded Recipes

REVERT TO FACTORY DEFAULT RECIPES

1. Press and hold the **OVEN** button for Approx 5 seconds or until the Special Functions Screen opens.

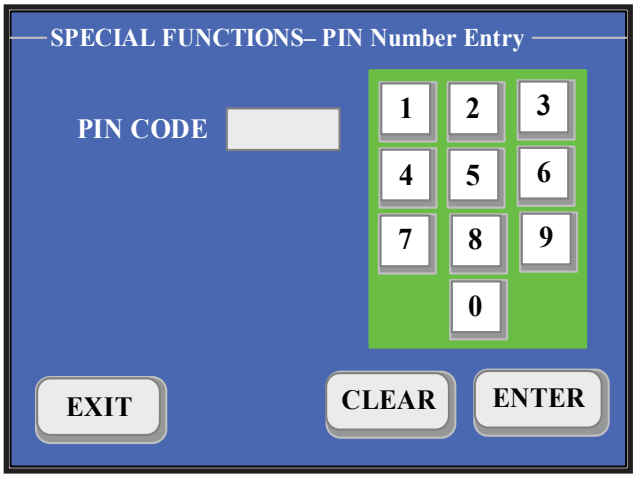

Figure 20: Special Functions Screen

2. Press **CLEAR**, **1 7 9 2** and **ENTER**.

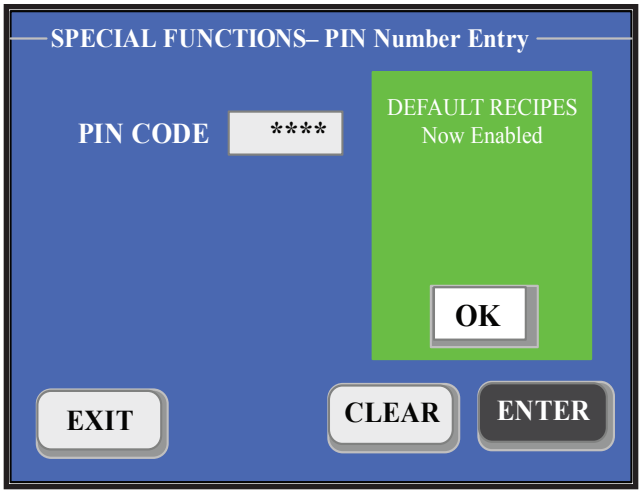

Figure 21: Default Recipe Enable Screen

3. Press **OK to accept Default Recipes.**
4. Press EXIT to return to main menu page.

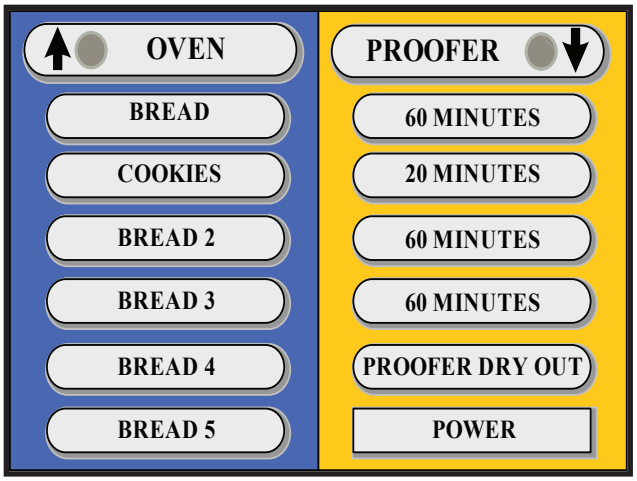

Figure 22: Main Menu Screen With Factory Default Recipes Loaded

USB MAINTENANCE AND OPERATIONS SCREENS LOAD/UPDATE

1. Turn the main power switch off then back on. Unit will beep three times and display the start screen.

Figure 23: Start Screen

2. Remove USB dust cap.

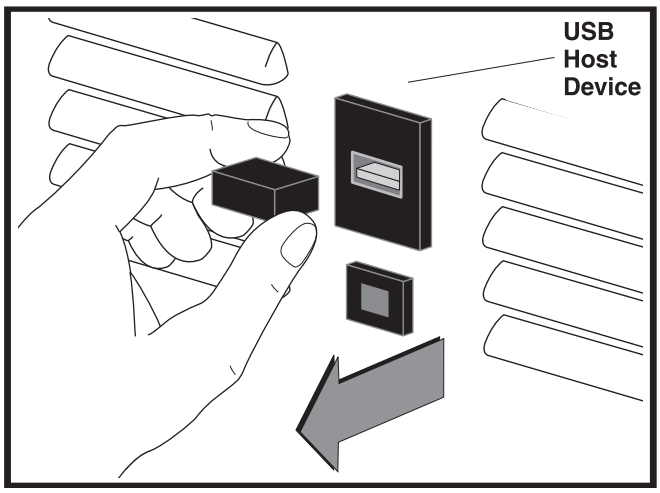

Figure 24: USB Dust Cap Removal

3. Load all desired files onto the same USB drive. (filename.scr) Insert USB drive with the desired files. The green LED will flash indicating loading process.

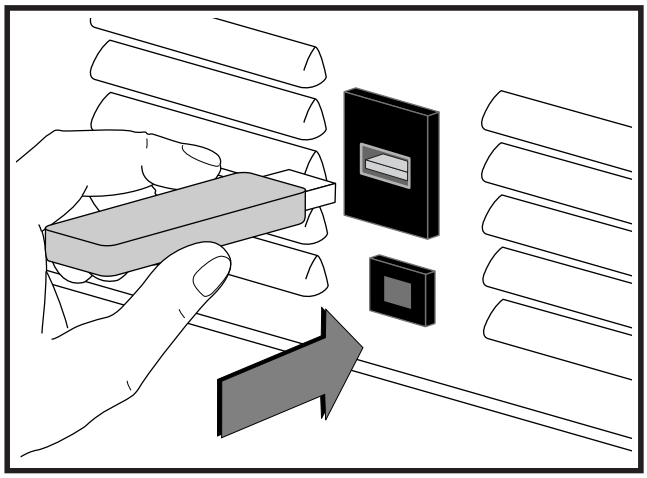

Figure 25: Inserting USB Drive Into USB Host Device

4. The new files will load and the screen will display the load status in blue text. The load time depends on the number and size of the files but may take several minutes to complete

Figure 26: File Upload Screen

5. When Complete, the unit beeps once and reverts to the Oven/Proofer Main Menu screen.

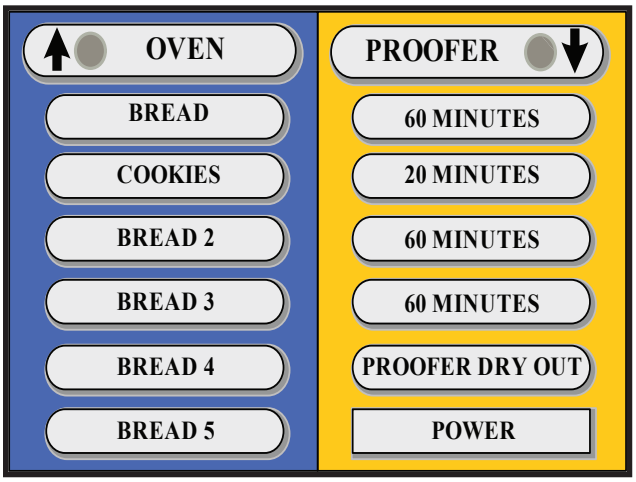

Figure 27: Main Menu Screen

6. The new files can now be viewed by accessing the Maintenance Screen and selecting the desired Maintenance Function Keys

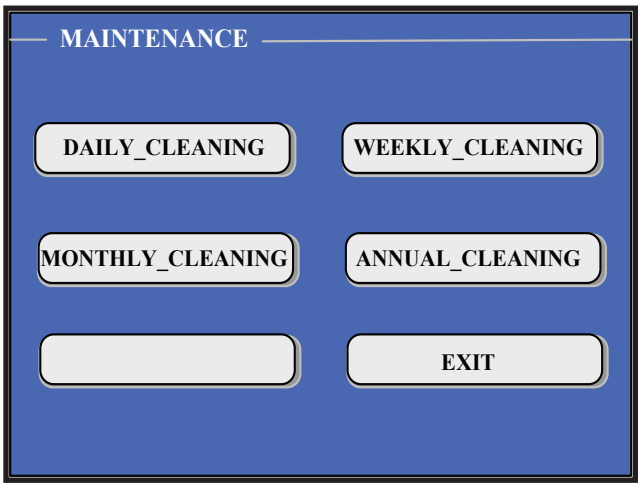

Figure 28: Maintenance Function Keys Screen

PROOFER OPERATING INSTRUCTIONS

Figure 29: Proofer Controls Screen

1. Turn the proofer ON by pressing the **PROOFER** button or the desired **RECIPE** button. Proofer will preheat for 10 minutes after reaching set point to ensure proper proofing conditions. An audible alarm will sound (3 short chirps) when the oven and/or proofer reach the ready state.

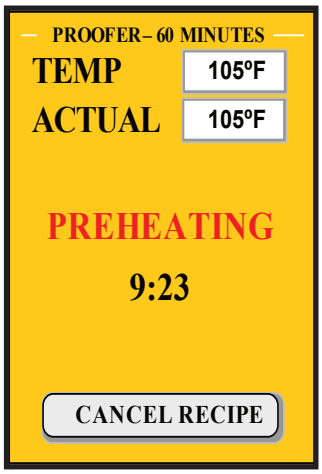

Figure 30: Proofer Preheating Screen

2. Once the Proofer recipe has been selected and the display has changed to the START buttons, the proofer's humidity should be visually verified before loading.

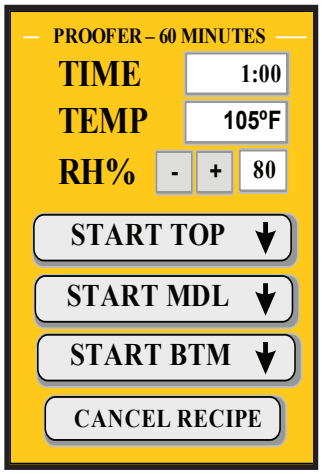

Figure 31: Proofer Ready Screen

3. Watch for a light fog to appear on the interior door glass; the proofer is ready to be loaded with dough.
4. Increase humidity, if door glass does not fog as the humidity is set too low; press + (plus) button next to **R.H.** (Relative Humidity).
5. Decrease humidity if water is running down door glass as the humidity is set too high; press – (minus) button next to **R.H.** (Relative Humidity).
6. Load the proofer with dough and press **START TOP, START MDL** or **START BTM**, depending on where dough is loaded. This will prevent over-proofing of the dough remaining in proofer after the first load has been moved to the oven. The remaining time will be displayed in the button area.
7. You can cancel an active timer by pressing/holding the desired timer until it beeps, approx 2 Sec.

Since the proofer can hold more pans than the oven can bake, a stagger load alarm will sound 1/3 the way thru recipe time of Proofer Cycle so that loads can be staggered.

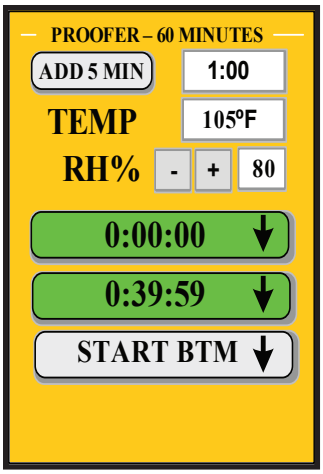

Figure 32: Proofer Timer Screen

Start Button will change to Time Remaining and an Alarm will sound to alert the operator which level is ready to be moved to the oven.

8. Once one level has reached the end of its proofing cycle, ADD 5 Min button will appear. You can add 5 Minutes to Proofing time by pressing the ADD 5 Min. You can only add the 5 minutes to a level that has reached the end of its proofing cycle and is flashing 0:00:00.

9. Adjust the time, if necessary, depending on type of dough and desired results.

10. Bake bread when dough rises to desired size.

Excessive humidity on the door glass is probably caused by a humidity setting that is too high or by having the humidity on when there is no dough loaded in the proofer.

OVEN OPERATING INSTRUCTIONS

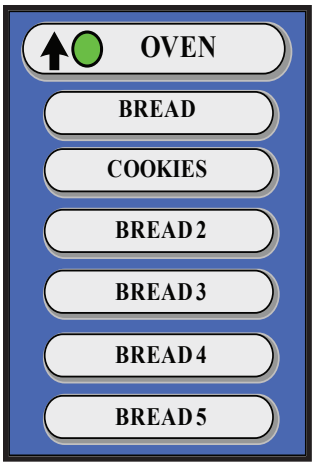

Figure 33: Oven Controls Screen

1. Turn the oven ON by pressing the **OVEN** button or the desired **RECIPE** button.

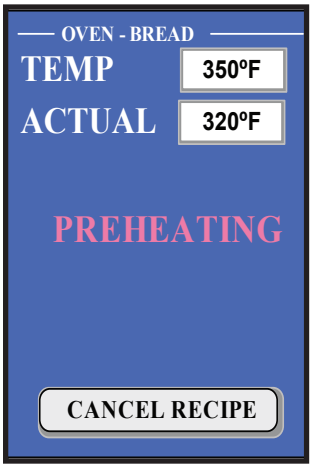

Figure 34: Oven Preheat screen

2. Allow the oven to preheat 20–30 minutes and keep the oven door closed, except during loading and unloading.

Display Module will flash **PREHEATING** while the oven is preheating. Display will change to **START** button when oven is ready for selected recipe. An audible alarm will sound (3 short chirps) when the oven and/or proofer reach the ready state.

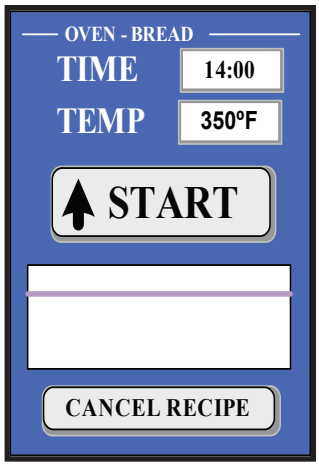

Figure 35: Oven Start Button Displayed

3. Load the oven with dough and press **START** button, which will change to **Time Remaining** and, when the recipe has completed, an alarm will sound.

4. You can cancel an active timer by pressing the desired timer until it beeps, approx 2 Sec.

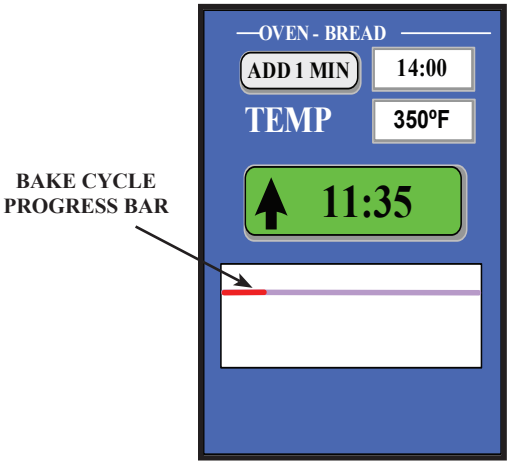

Figure 36: Oven Add 1 Min Button Displayed

5. You can add time to baking timer at any point during or at the end of a baking cycle. You must add time in 1 minute increments by pressing the ADD 1 Min button.

6. The progress bar turns red to visually show elapsed and remaining bake process duration. Figure 23.

Baking Tips

- Always select the oven recipe and allow preheat time prior to loading product. Only load when the "START" button is displayed. Load the oven with six pans of dough & press the start button.
- If the bread color is uneven, reduce temperature and extend bake time in recipe (see **Programming Controls**).
- If the bread is too dark, reduce the bake time in the recipe (see Programming Controls). If the bake time is reduced and the bread is still too dark, reduce the temperature by 15° F (10° C) and bake longer.
- When baking partial loads, center the pans in the oven and start loading at the bottom shelf and work up to the top.

Opening oven door allows heat to escape. Under normal conditions, quick loading and unloading will not be a problem. If door is left open too long, oven performance will be affected.

CARE AND CLEANING

WARNING

OVEN & PROOFER INTERIOR AND RACKS ARE VERY HOT AND COOL SLOWLY. ALLOW TO COOL BEFORE HANDLING.

CAUTION

Electrical shock hazard: Do not wash with water jet or hose.

CAUTION

Do not use oven cleaners, caustic cleaners, degreasers, acids, ammonia products, abrasive cleaners, steel wool, or abrasive pads containing iron. These can damage the stainless steel, door gaskets and plastic surfaces.

Daily Cleaning Instructions

1. Clean stainless steel exterior with stainless steel cleaner or polish, or with hot soapy water followed by a clean water rinse.

2. Clean Oven and Proofer doors with a glass cleaner

3. Clean Oven and Proofer interiors with a damp cloth. If heavy soil areas exist clean with hot soapy water and follow with clean damp cloth.

4. Run Proofer Dry Out cycle.

Figure 37: Proofer Controls Screen

- Follow instructions given on screen after pressing "PROOFER DRY OUT". This special function allows automatic water dry out after daily proofer use is completed.

Figure 38: Proofer Dry Out Screen

- Proofer will turn off when Dry Out is complete after approximately one hour.

TROUBLESHOOTING

PROBLEM	YES	NO
1. Oven does not heat with oven switch in the ON position and Oven Temperature not set at 0°.		
a. Are oven indicator lights on?	Observe Oven Fan. Go to “b”.	Reset Hi-limit Switch
b. Does Oven Fan work?	Call Duke Service.	Check Proofer Operation. Go to “d”.
c. Is Oven Door Securely closed?	Call Duke Service.	Close Door securely. Go to “e”.
d. Is Supply Circuit Breaker tripped?	Reset Circuit Breaker. Try oven again. Go to “e”.	Check Fuses on Control Box. Goto “e”.
e. Does oven work?	Troubleshooting complete.	Call Duke Service.
2. Proofer does not heat with Proofer Switch in the ON position Proofer		
a. Are Proofer indicator lights on?	Observe Proofer Fan. Go to “b”.	Check Oven Operation. Go to “c”.
b. Does Proofer Fan appear to work?	Call Duke Service.	Check Oven Operation. Go to “c”.
c. Does Proofer work?	Call Duke Service.	Check Supply Circuit Breaker. Go to “d”.
d. Is Supply Circuit Breaker tripped?	Reset Circuit Breaker. Try Proofer again.	Call Duke Service.
e. Does Proofer work?	Troubleshooting complete.	Call Duke Service.
3. Oven/Proofer lights not working.		
a. Is more than one light not working?	Replace inoperative light bulbs and recheck. Go to “b”.	Call Duke Service.
b. Do lights work?	Troubleshooting complete.	Call Duke Service.
4. Proofer Humidity not working/ insufficient with Humidity Control not set to Off.		
a. Does there appear to be a light fog on the Proofer door?	Decrease humidity if too much moisture on proofer door. Go to “b”.	Increase humidity if not enough moisture on proofer door. Wait 15 minutes. Go to “b”.
b. Does Proofer Fan appear to work?	Go to "c".	Call Duke Service
c. Confirm water supply to unit is on.	Go to "d".	Turn water supply on. Go to "d".
d. Check for restrictions in water line. (Kinks in water line, Clogged filter or inlet strainer)	Troubleshooting complete.	Call Duke Service.

A Manually reset high temperature safety limit is provided on the right side of the control section of the unit to protect the oven elements. The high limit will not trip under normal operating conditions. Should the oven high limit trip, push the RESET button. The high limit will reset with a "click" if an over temperature trip occurred. If condition persists, call Duke Service.

HIGH LIMIT PROTECTOR FOR OVEN ELEMENTS

LOACTED ON RIGHT SIDE OF CONTROLS SECTION

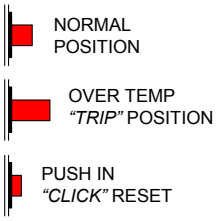

WIRING DIAGRAM

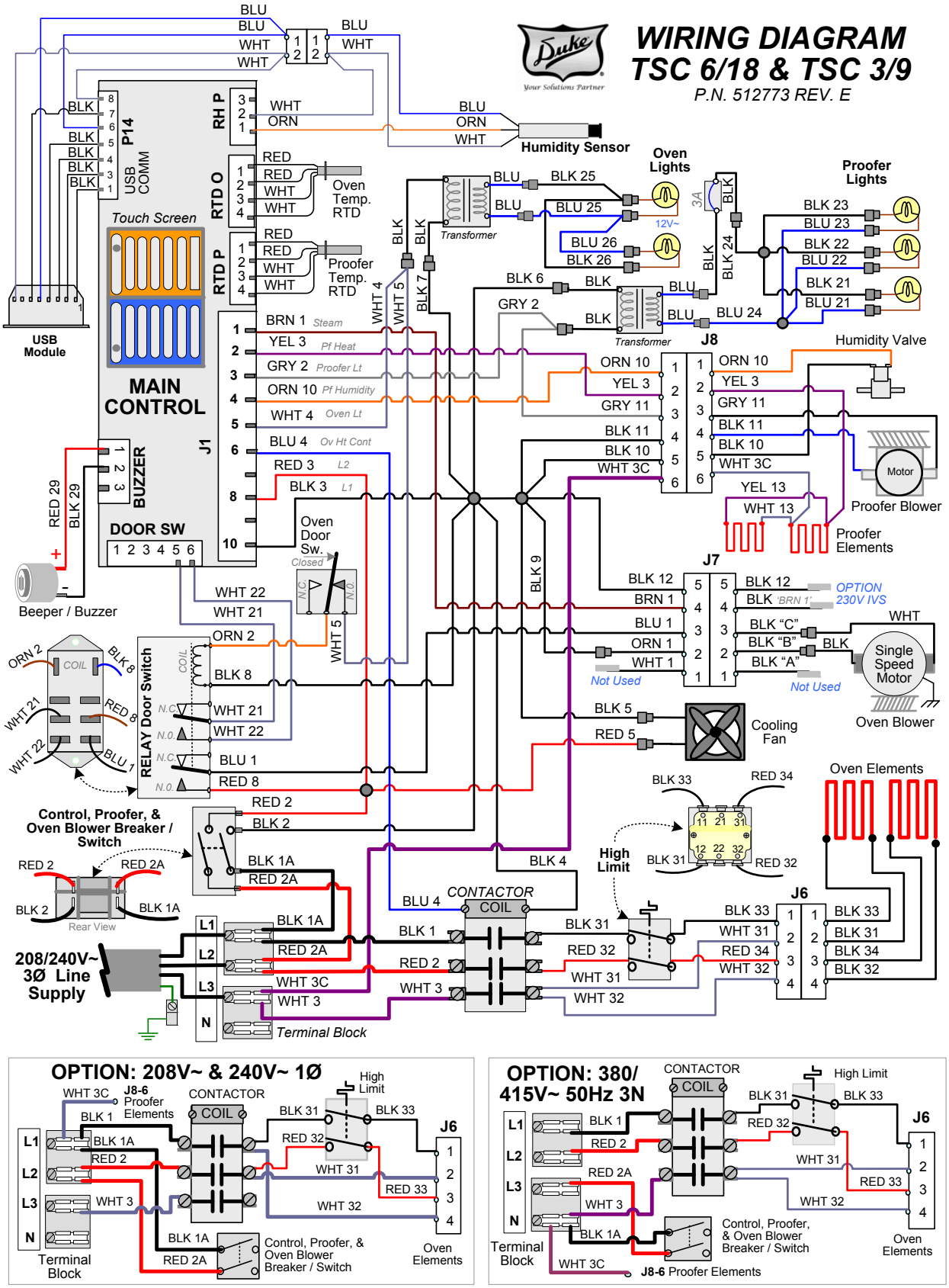

CUSTOMER ASSISTANCE

To aid in reporting this unit in case of loss or theft, please record below the model number and serial number located on the unit. We also suggest you record all the information listed and retain for future reference.

MODEL NUMBER:	**SERIAL NUMBER:**
DATE OF PURCHASE:	
DEALER:	**TELEPHONE:**
SERVICER:	**TELEPHONE:**

DUKE CORPORATE, CANADA, LATIN AMERICA

2305 N. Broadway
St. Louis, MO 63102
Phone: 314-231-1130
Toll Free: 800-735-3853
Fax: 314-231-2460
service-dispatch@dukemfg.com

DUKE ASIA PACIFIC

Duke Manufacturing
No.3 Building
Lane 28, Yu Lv Road
Malu Town, Jiading District
Shanghai 201801, China
Phone: +86 21 59153525 / 59153526
Fax: +86 21 33600628

DUKE EMEA - EUROPE, MIDDLE EAST, AFRICA, RUSSIA

Duke Manufacturing CR, s.r.o.
Zdebradska 92
Jazlovice, Ricany
Building number DC 4 on the
ProLogis Park Prague D1 West
Prague 251 01
Czech Republic
Phone: +420 257 741 033
Fax: +420 257 741 039
service.prague@duke-emea.com

DUKE EMEA – UK, IRELAND, NORDIC COUNTRIES

Duke Manufacturing UK Ltd.
Unit 10, Greendale Business Park
Woodbury Salterton
Exeter, EX5 1EW
Phone: +44 (0) 1395 234140
Fax: +44 (0) 1395 234154
service.exeter@duke-emea.com

TO ACCESS INTERNET: www.dukemfg.com

Please provide the following information when you write or call: model number, serial number, date of purchase, your complete mailing address (including zip code), and description of the problem.

Your Solutions Partner

Duke Manufacturing Co.

Duke Corporate, Canada, Latin America
2305 N. Broadway
St. Louis, MO 63102
Phone: 314-231-1130
Toll Free: 800-735-3853
Fax: 314-231-5074
www.dukemfg.com

Duke EMEA - Europe, Middle East, Africa, Russia
Duke Manufacturing CR, s.r.o.
Zdebradska 92
Jazlovice, Ricany
Building number DC 4 on the
ProLogis Park Prague D1 West
Prague 251 01
Czech Republic
Phone: +420 257 741 033
Fax: +420 257 741 039

Duke EMEA – UK, Ireland, Nordic Countries
Duke Manufacturing UK Ltd.
Unit 10, Greendale Business Park
Woodbury Salterton
Exeter, EX5 1EW
Phone: +44 (0) 1395 234140
Fax: +44 (0) 1395 234154

Duke Asia Pacific
Duke Manufacturing
No.3 Building
Lane 28, Yu Lv Road
Malu Town, Jiading District
Shanghai 201801, China
Phone: +86 21 59153525 / 59153526
Fax: +86 21 33600628